Columbia Taping Tools

Fixed Handles 3'

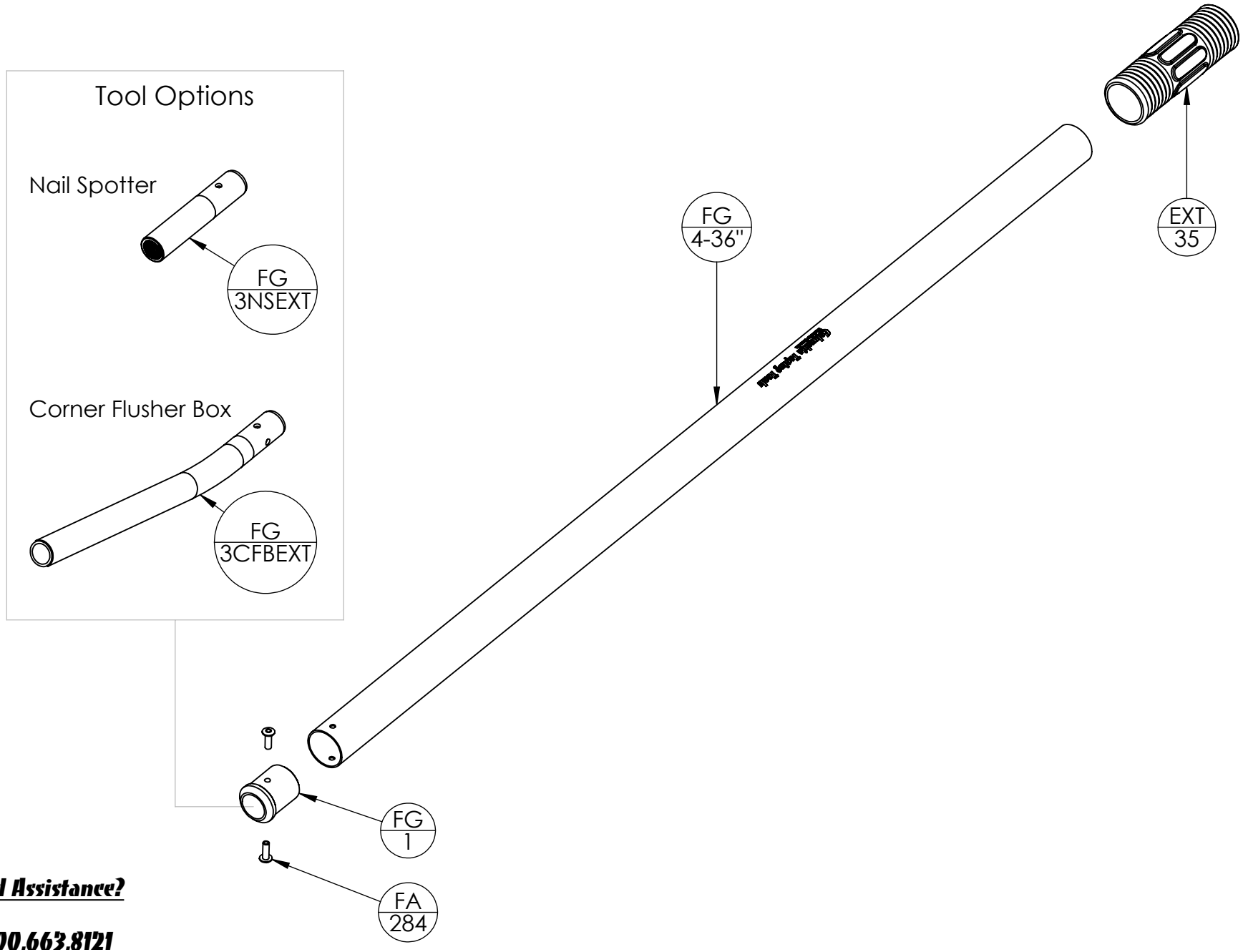

Need Assistance?

1.800.663.8121
www.columbiatools.com

September 2014